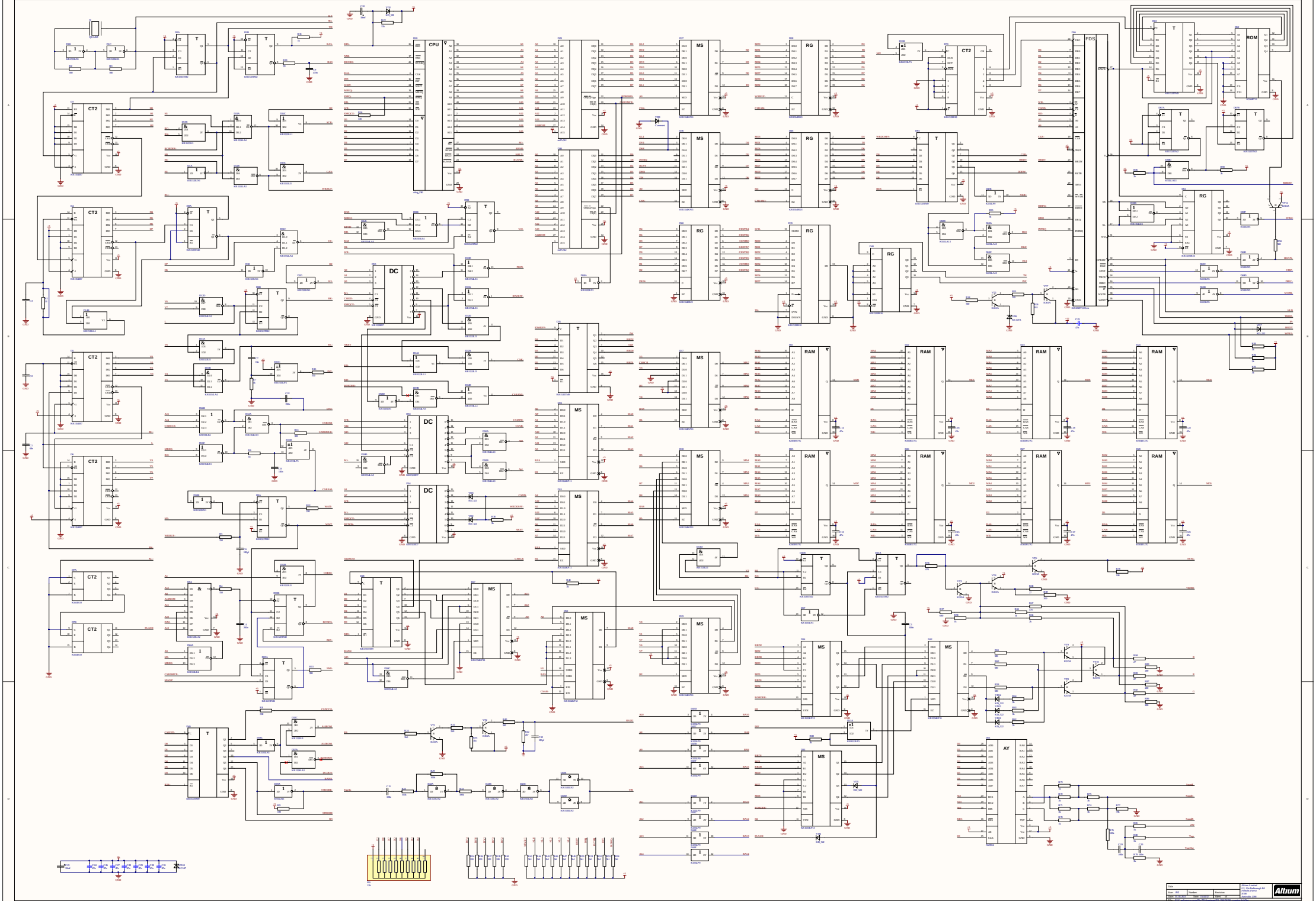
CPU
MS
RG
CT2
FDS
ROM
T
DC
RAM
AY
Altium